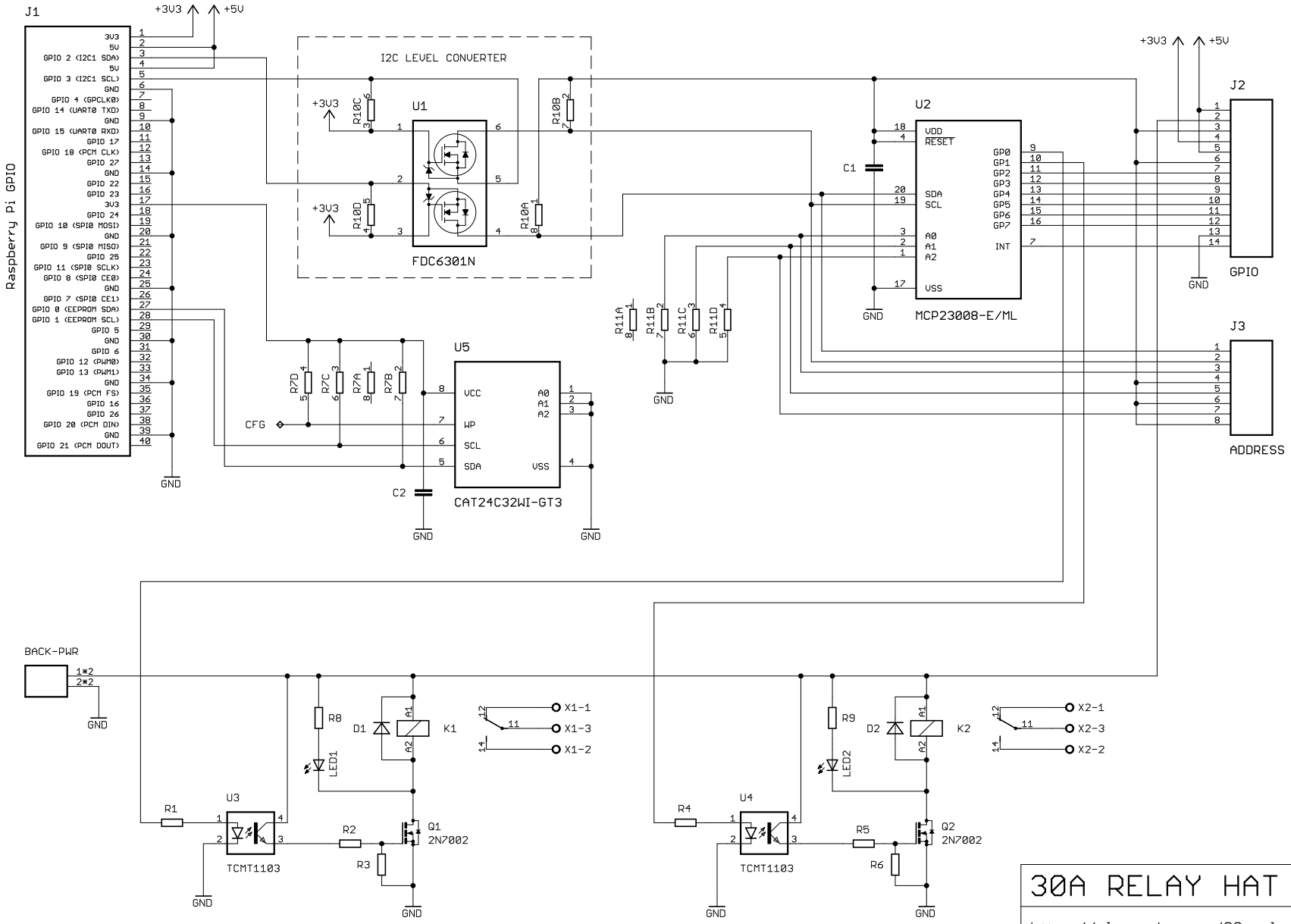


# 30A RELAY HAT V1.2

https://plasmadan.com/30arelayhat

Drawn By:
Dan Jones
PlasmaDan.com

Date: 19/12/2020

Sheet: 1/1